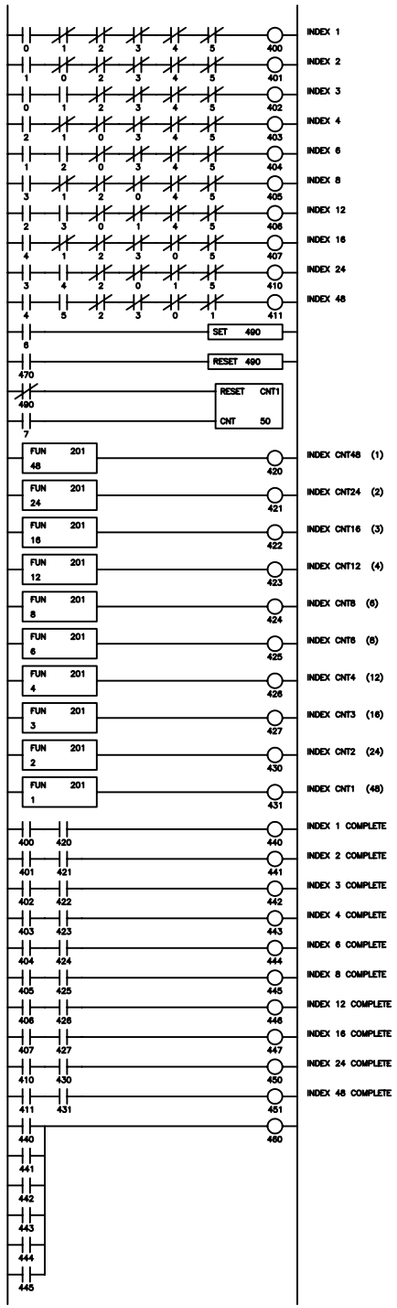

PLC LADDER LOGIC PROGRAM DIAGRAM

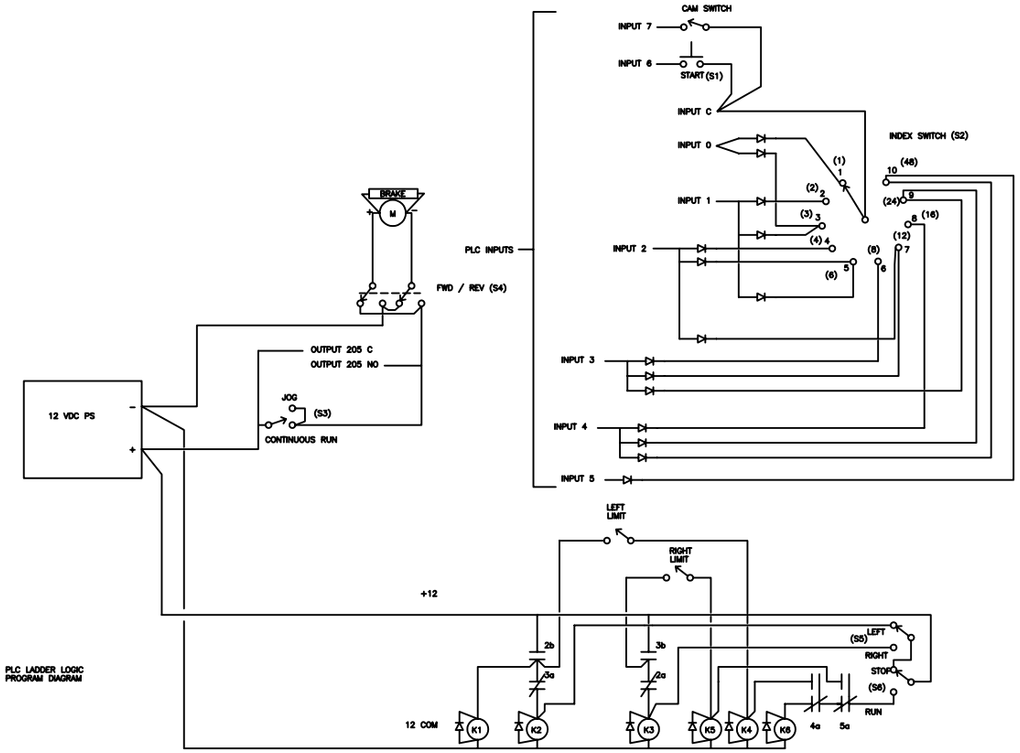

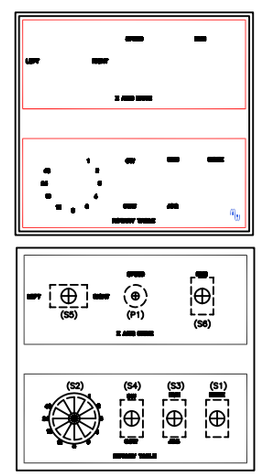

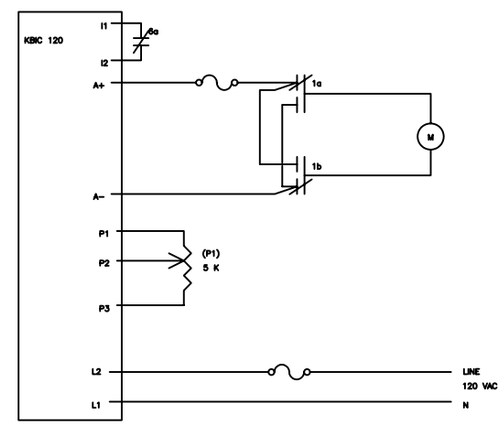

CONTROL SYSTEM FOR LEGACY ORNAMENTAL MILL
SYSTEM DESIGN BY MIKE WILSON 4-27-05
MARIETTA, GA